TITLE: "B"/SINE/110/ENG/T2/CONN	DRAWING NUMBER: MPM664BSF6JN1N

REVISIONS

REV.	DESCRIPTION	DATE	APPD.
	PRELIMINARY	2/8/02	LIN

MOTOR DATA @ 110 VAC (SINE)

MOTOR PARAMETERS		UNITS	VALUE
HORSEPOWER	HP RATED	Hp	.34
KILOWATTS	KW RATED	KW	.26
MAX. OPERATING SPEED	N MAX	RPM	3600
SPEED @ RATED TORQUE	N RATED	RPM	3000
* CONTINUOUS RATED TORQUE @ 3000 RPM		IN-LBS[Nm]	8.0[.90]
* CONTINUOUS STALL TORQUE		IN-LBS[Nm]	10.0[1.1]
CONTINUOUS LINE CURRENT		AMPS(RMS/Φ)	2.2
PEAK TORQUE	Tpk	IN-LBS[Nm]	30.0[3.4]
PEAK CURRENT		AMPS(RMS/Φ)	6.6
MAX. THEORETICAL ACCEL.		RAD/SEC²	188,679
TORQUE SENSITIVITY	Kt	IN-LBS/AMP(RMS/Φ)[Nm/AMP(RMS/Φ)]	4.5[.51]
BACK EMF (LINE TO LINE)	±10%	Vrms/Krpm	28.3
D.C. RESISTANCE (P-P)	±10%	OHMS	7.0
INDUCTANCE (P-P)	±10%	MILLIHENRIES	11.0
ROTOR INERTIA	Jm	IN-LBS-SEC²[Kg-M²]	.000159[.0000179]
STATIC FRICTION	Tf	IN-LBS[Nm]	.8[.09]

*25°C AMBIENT WITH A MAXIMUM CASE TEMPERATURE OF 100°C ON MOTOR. MOTOR MOUNTED ON A 10" X 10" X 1/4" ALUMINUM HEATSINK. THERMOSTAT IN STATOR WINDINGS WILL OPEN IF WINDING TEMPERATURE EXCEEDS 155°C. THIS ALLOWS FOR AN APPROXIMATE +10% HEADROOM IN THE CONTINUOUS TORQUE RATING BEFORE THERMOSTAT OPENS.

MECHANICAL NOTES:

1. AXIAL LOAD: 15 LBS MAX
2. RADIAL LOAD: 20 LBS MAX @ 1" FROM FACE
3. MOTOR SEALED TO IP65.
4. MOTOR WEIGHT: 3.6 LBS. [1.6 Kg]
5. MOTOR FINISH: BLACK EPOXY
6. MOTOR OUTPUT SHAFT: STAINLESS STEEL
7. INCHES (MILLIMETERS)

ENCODER: (290-00056)

OIH35-2000P4-L6-5V

CONNECTION CHART

MOTOR/ENCODER/THERM CONNECTOR:
PT02E-16-23P(027)
(270-00219)

ENC/THERM WIRE LEADS		
PIN	WIRE FUNCTION	WIRE COLOR
T	GROUND	BLACK
E	+5VDC	RED
F	CH A	BLUE
U	CH A\	BLUE/BLK
G	CH B	GREEN
V	CH B\	GRN/BLK
H	CH Z	YELLOW
W	CH Z\	YEL/BLK
J	CH U	BROWN
K	CH U\	BRN/BLK
X	CH V	GRAY
L	CH V\	GRAY/BLK
Y	CH W	WHITE
M	CH W\	WHT/BLK
N	GND/CABLE	SHLD
S	THERM	BLACK
R	THERM	BLACK
P	–	–
Z	–	–

MOTOR WIRE LEADS		
PIN	WIRE FUNCTION	WIRE COLOR
A	ΦR	RED
B	ΦS	BLACK
C	ΦT	BLUE
D	PE GND	GRN/YEL

MOTOR & HALL POSITION CHART

HALL LEADS / MOTOR LEADS	BROWN / BLACK respect to RED	GRAY / RED respect to BLUE	WHITE / BLUE respect to BLACK
VIEW ON THE OSCILLOSCOPE			

*MOTOR ROTATION CCW (COUNTER CLOCKWISE)
(LOOKING AT THE FACE OF THE MOTOR)

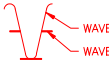

WAVE REPRESENTING STATOR OUTPUT
WAVE REPRESENTING HALL SENSOR

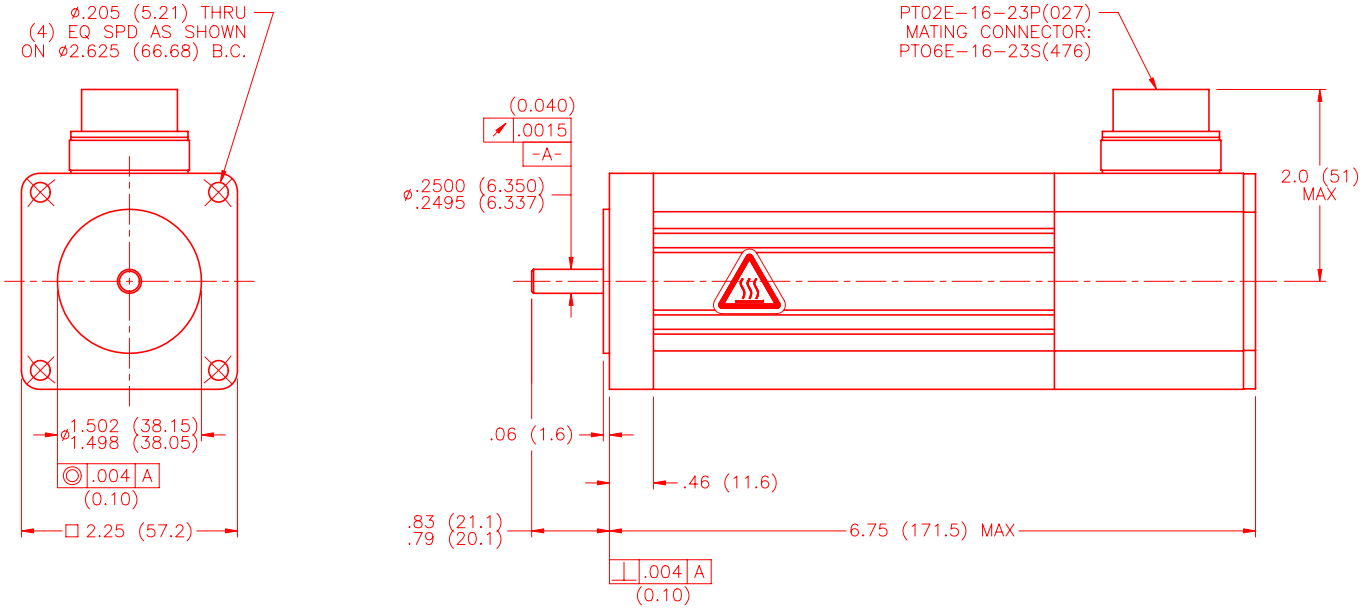

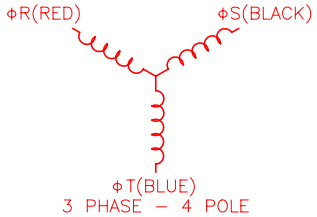

NO.	PART NUMBER	DESCRIPTION	QTY.

TOLERANCES UNLESS SPECIFIED
DECIMAL .XXX ± .005
DECIMAL .XX ± .010
DECIMAL .X ± .020
FRACTION ± 1/64
ANGLE ± 1/2°

MTS Systems Corporation
Automation Division

PROPRIETARY RIGHTS OF MTS AUTOMATION ARE INCLUDED IN THE INFORMATION DISCLOSED HEREIN, THIS DRAWING AND/OR DOCUMENT SHALL NOT BE REPRODUCED OR TRANSFERRED TO OTHER DOCUMENTS OR USED OR DISCLOSED TO OTHERS FOR ANY PURPOSE EXCEPT FOR WHICH WAS SPECIFICALLY FURNISHED.

DRAWN: LIN
DATE: 2/8/02
CHECKED:
APPROVED:

TITLE: "B"/SINE/110/ENG/T2/CONN
REV.
MATERIAL:
DRAWING NUMBER: MPM664BSF6JN1N
SCALE: 1:1