TITLE: "C"/TRAP/460/MET/RES/NPT	DRAWING NUMBER: MPM1421CTJ7G3N

REVISIONS

REV.	DESCRIPTION	DATE	APPD.
	PRELIMINARY	10/7/99	ELS

MOTOR DATA @ 460 VAC (TRAP)

MOTOR PARAMETERS		UNITS	VALUE
HORSEPOWER	HP RATED	Hp	4.9
KILOWATTS	KW RATED	KW	3.6
MAX. OPERATING SPEED	N MAX	RPM	3400
SPEED @ RATED TORQUE	N RATED	RPM	2800
* CONTINUOUS RATED TORQUE @ 2800 RPM		IN-LBS[Nm]	110.0[12.4]
* CONTINUOUS STALL TORQUE		IN-LBS[Nm]	130.0[14.7]
CONTINUOUS LINE CURRENT		AMPS	9.8
PEAK TORQUE	Tpk	IN-LBS[Nm]	390.0[43.9]
PEAK CURRENT		AMPS	29.6
MAX. THEORETICAL ACCEL.		RAD/SEC²	36,792
TORQUE SENSITIVITY	Kt	IN-LBS/AMP[Nm/AMP]	13.3[1.5]
BACK EMF (LINE TO LINE)	±10%	Vrms/Krpm	115.0
D.C. RESISTANCE (P-P)	±10%	OHMS	1.9
INDUCTANCE (P-P)	±10%	MILLIHENRIES	14.4
ROTOR INERTIA	Jm	IN-LBS-SEC²[Kg-M²]	.0106[.00119]
STATIC FRICTION	Tf	IN-LBS[Nm]	2.4[0.27]

*25°C AMBIENT WITH A MAXIMUM CASE TEMPERATURE OF 100°C ON MOTOR. MOTOR MOUNTED ON A 12" X 12" X 1/2" ALUMINUM HEATSINK. THERMOSTAT IN STATOR WINDINGS WILL OPEN IF WINDING TEMPERATURE EXCEEDS 155°C. THIS ALLOWS FOR AN APPROXIMATE +10% HEADROOM IN THE CONTINUOUS TORQUE RATING BEFORE THERMOSTAT OPENS.

MECHANICAL NOTES:

1. AXIAL LOAD: 50 LBS MAX
2. RADIAL LOAD: 150 LBS MAX @ 1" FROM FACE
3. MOTOR SEALED TO IP65.
4. MOTOR WEIGHT: 36 LBS. [16.3 Kg]
5. MOTOR FINISH: BLACK EPOXY
6. MOTOR OUTPUT SHAFT: STAINLESS STEEL
7. MILLIMETERS (INCHES)

CONNECTION CHART

MOTOR WIRE LEADS		
PIN	WIRE FUNCTION	WIRE COLOR
1	ΦR	RED
2	ΦS	BLACK
3	ΦT	BLUE
4	PE GND	GRN/YEL

RES/THERM WIRE LEADS		
	WIRE FUNCTION	WIRE COLOR
S9	REF GND	YEL/WHT
S8	REF	RED/WHT
S7	SIN	YELLOW
S6	COS	RED
S5	COS GND	BLACK
S4	SIN GND	BLUE
S3	THERM	BLACK
S2	THERM	BLACK
S1	RES/SHLD	GRN/YEL

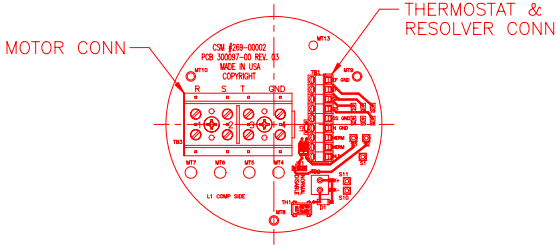

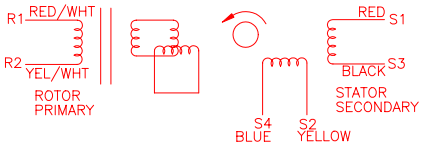

SCHEMATIC DRAWING FOR BRUSHLESS RESOLVER

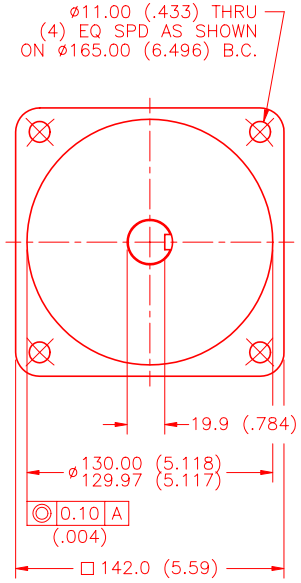

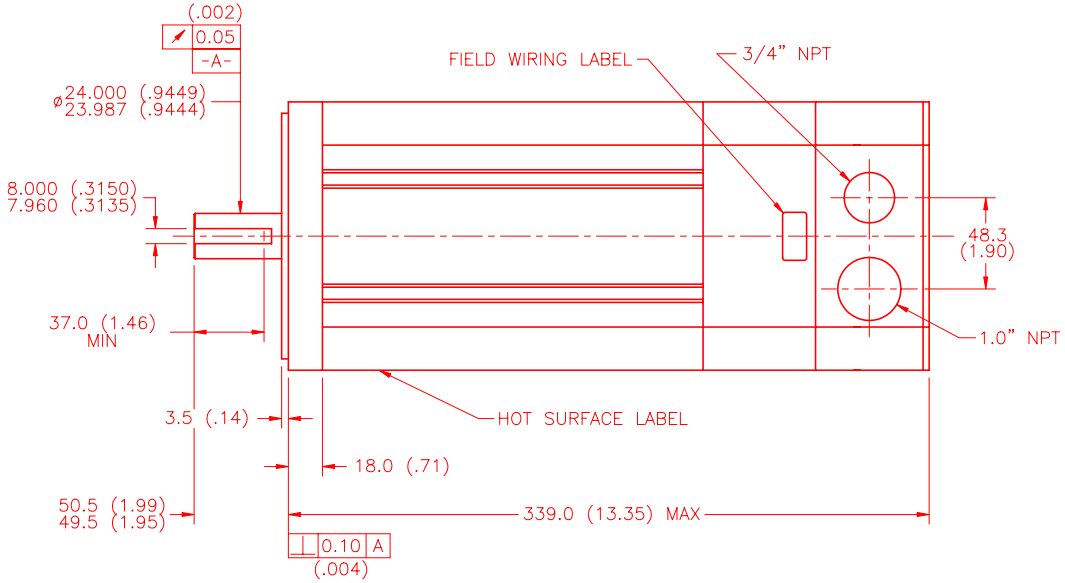

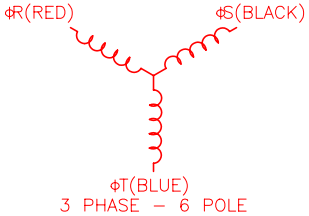

NO.	PART NUMBER	DESCRIPTION	QTY.

TOLERANCES UNLESS SPECIFIED
DECIMAL .XXX ± .005
DECIMAL .XX ± .010
DECIMAL .X ± .020
FRACTION ± 1/64
ANGLE ± 1/2°

MTS Systems Corporation
Automation Division

PROPRIETARY RIGHTS OF MTS AUTOMATION ARE INCLUDED IN THE INFORMATION DISCLOSED HEREIN, THIS DRAWING AND/OR DOCUMENT SHALL NOT BE REPRODUCED OR TRANSFERRED TO OTHER DOCUMENTS OR USED OR DISCLOSED TO OTHERS FOR ANY PURPOSE EXCEPT FOR WHICH WAS SPECIFICALLY FURNISHED.

DRAWN: MVS	TITLE: "C"/TRAP/460/MET/RES/NPT	REV.
DATE: 4/19/99		
CHECKED:	MATERIAL:	
APPROVED:	DRAWING NUMBER: MPM1421CTJ7G3N	SCALE: 1/2:1